JOHN E. CARDARELLE AND ASSOCIATES ENG'RS. & SURVEYORS WE 9-7590 MINNEAPOLIS

CERTIFICATE OF SURVEY

7828

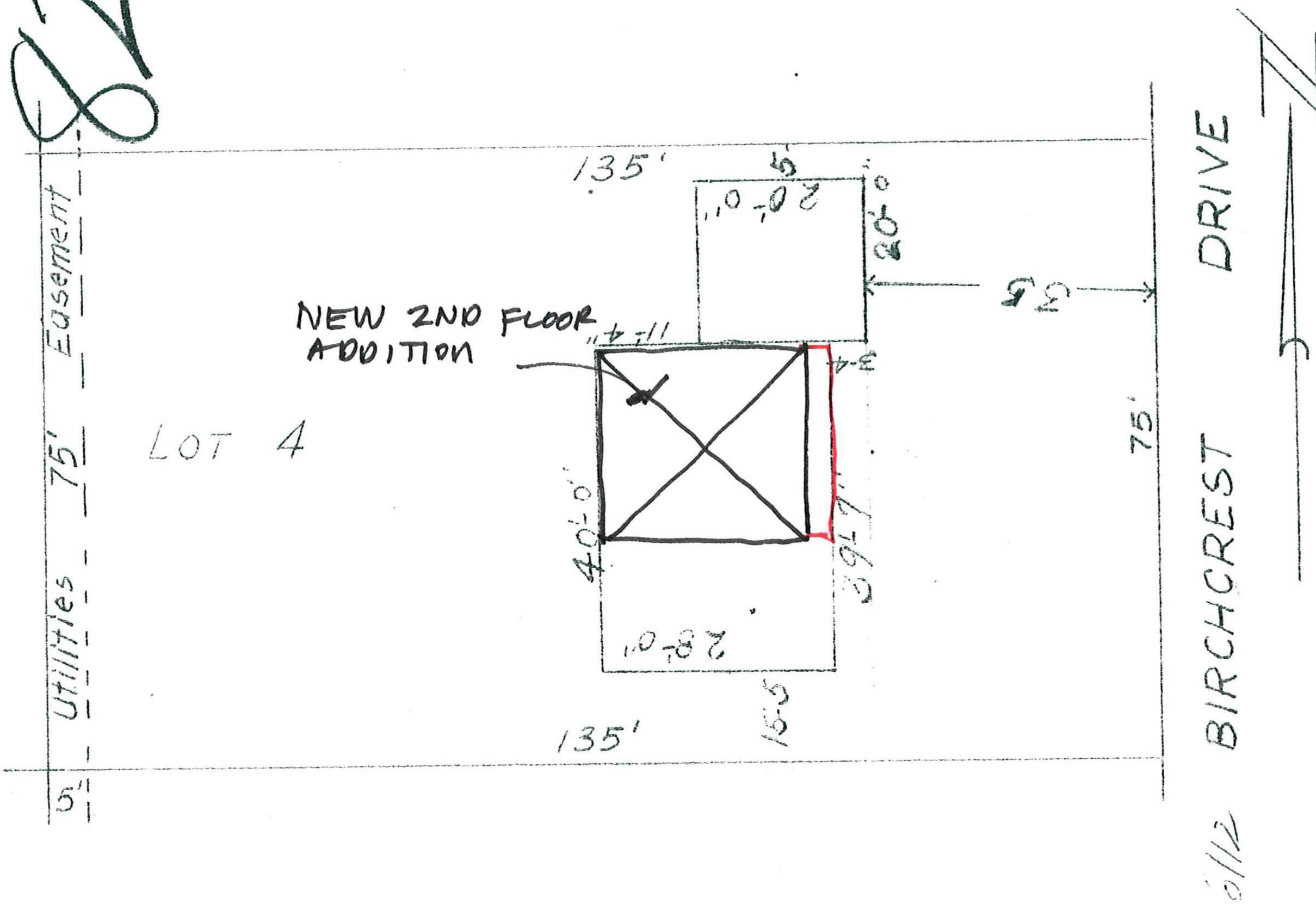

This is to certify that I have surveyed Lot 4, Block 3, Birchcrest, Village of Edina, Minnesota, as above shown

Dec. 1954

BUILDING DEPARTMENT
SEP 29 2011
CITY OF EDINA

30-117-21-34-0030
6112 BIRCHCREST
2ND FL. ADD.

John E. Cardarelle

JOHN E. CARDARELLE
STATE REG. NO. 566